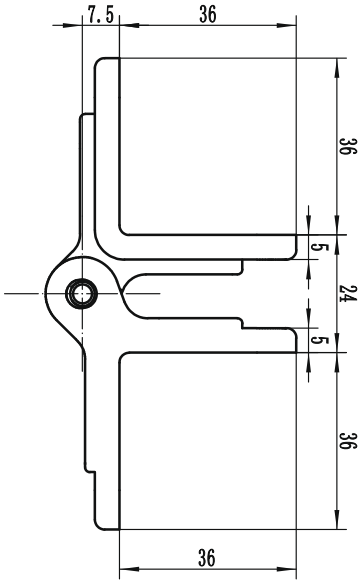
7.5
36
36
5
24
5
36
36

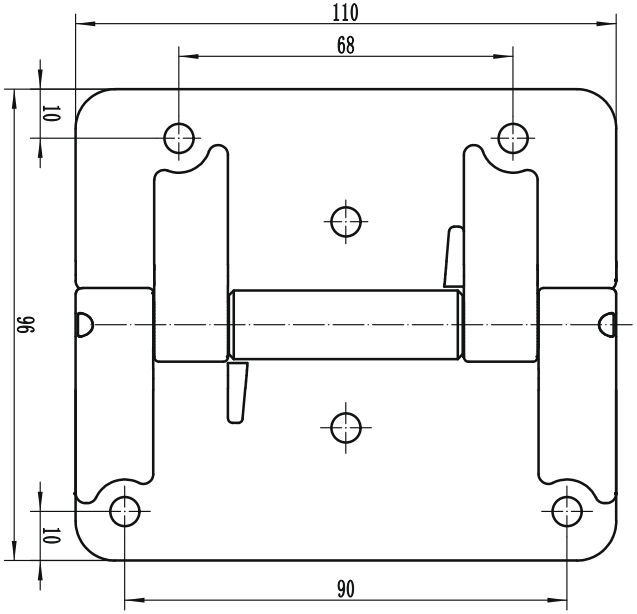
110
68
10
96
10
90

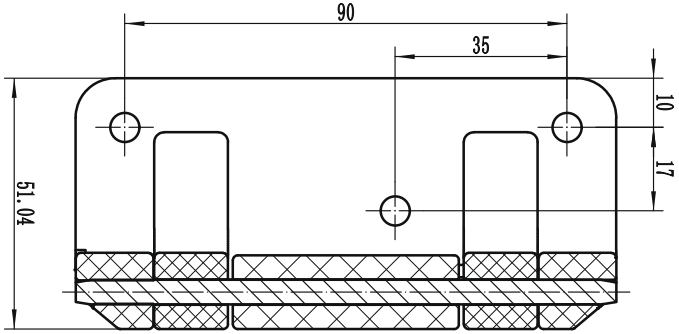
90
35
10
17
51.04